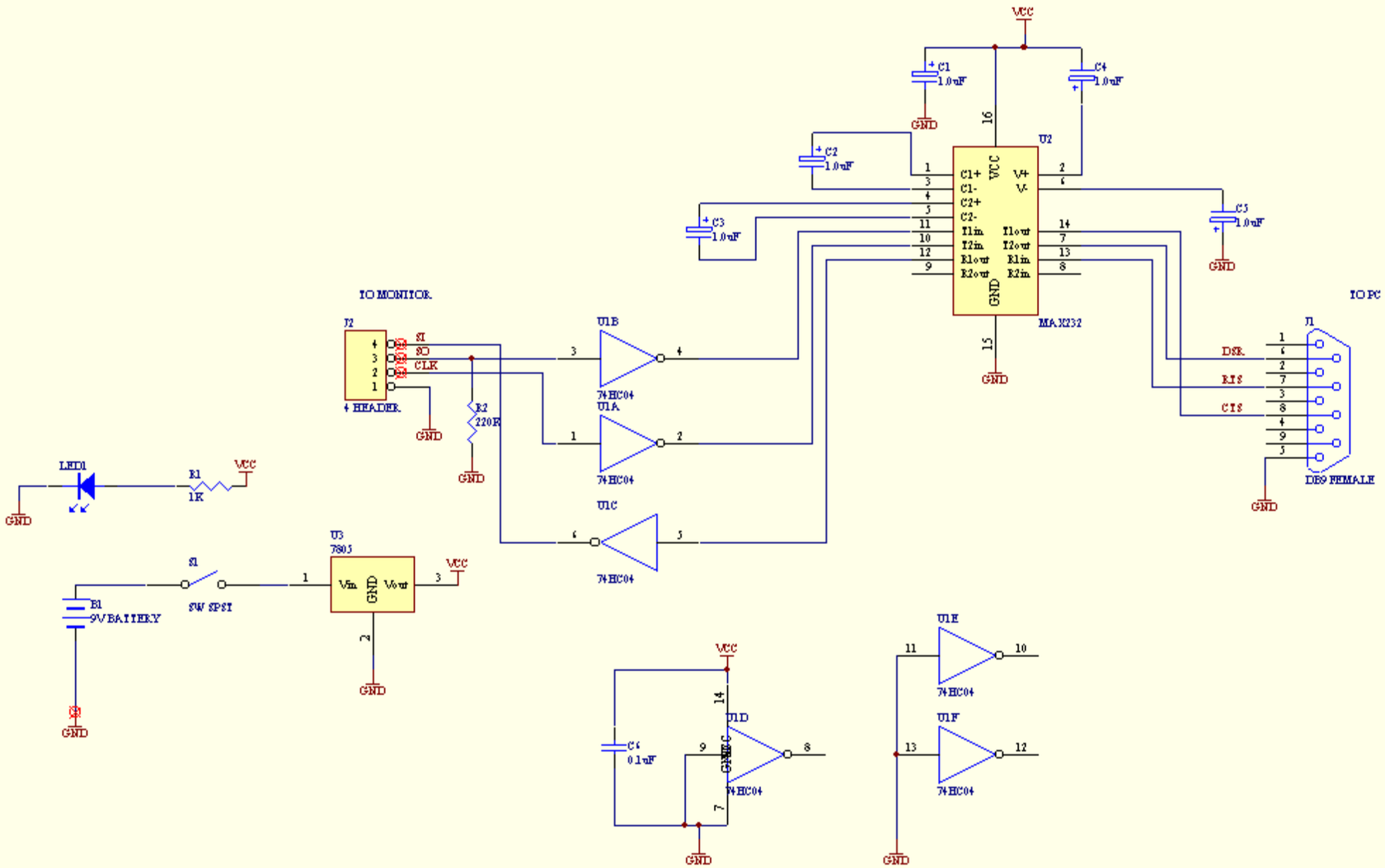

Title		
Size B	Number	Revision
Date: 14-Feb-2000		Sheet of
File: C:\KumaTech\User\las\DAS.Sch		Drawn By: